Operator & Service Manual

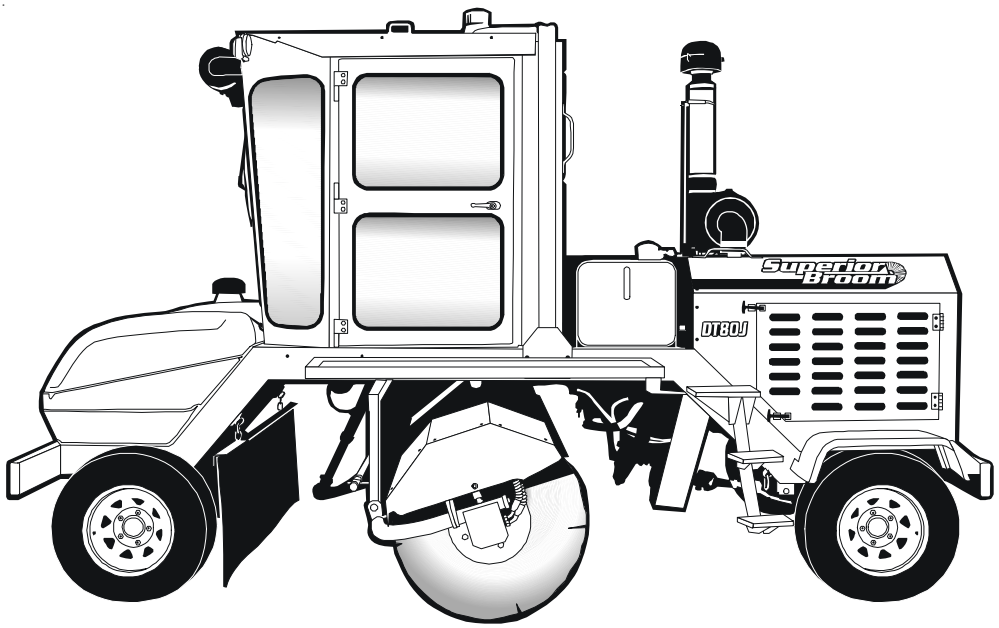

August 2019

WARRANTY
For Self- Propelled Sweepers

S B Manufacturing warrants that new equipment manufactured by it and delivered hereunder will be free of defects in material and workmanship for the earlier of twelve (12) months from delivery to, or the accumulation of 1,000 hours of service by the initial user. Any sweepers placed into service through the dealers rental fleet shall constitute the initial user phase of the in service date.

The Purchaser shall be obligated to promptly report any failure to conform to this warranty to the Company by phone, in writing or e-mail within the applicable period, whereupon the Company shall, at its option, correct such nonconformity, by suitable repair to such equipment or, furnish a replacement part F.O.B. point of shipment, provided the Purchaser has stored, installed, maintained and operated such equipment in accordance with good industry practices and has complied with specific recommendation of the Company. The company shall not be liable for any repairs, replacements, or adjustments to the equipment of any costs of labor performed by the purchaser or others without the company's prior written approval.

This warranty does not apply to failures occurring as a result of abuse, misuse, negligent repairs, corrosion, erosion and normal wear and tear, alterations or modification made to the product without express written consent of the company, or failure to follow the recommended operating practices and maintenance procedures as provided in the equipment's operating and maintenance publications. Accessories or equipment furnished by the company, but manufactured by others,
including, but not limited to, engines, tires, batteries, engine electrical equipment, hydraulic transmissions, and carriers, shall carry whatever warranty the manufacturers have conveyed to the company and which can be passed on to the purchaser.

The Company makes no other warranty or representation of any kind whatsoever, express or implied, except that of title, and all implied warranties, including any warranty of merchantability and fitness for a particular purpose, are hereby disclaimed.

Correction by the company of nonconformities whether patent or latent, in the manner and for the period of time provided above, shall constitute fulfillment of all liabilities of the company for such nonconformities, whether based on contract, warranty, negligence, indemnity, strict liability or otherwise with respect to or arising out of such equipment.

The purchaser shall not operate equipment which is considered to be defective, without first notifying the company in writing of its intention to do so Any such use of equipment will be at the purchaser's sole risk and liability.

S B Manufacturing Incorporated
3707 West McCormick
Wichita, Kansas 67213

Table of Contents:

Safety

Recognize Safety Information

This is the safety-alert symbol. When you see this symbol on your machine or in this manual, be alert to the potential for personal injury.
Follow recommended precautions and safe operating practices.

Understand Signal Words

A signal word - DANGER, WARNING, or CAUTION - is used with the safety-alert symbol.
DANGER identifies the most serious hazards.
DANGER or WARNING safety signs are located near specific hazards.
General precautions are listed on CAUTION safety signs.
CAUTION also calls attention to safety messages in this manual.

Follow Safety Instructions

Carefully read all safety messages in this manual and on your machine.
Keep safety signs in good condition.
Replace missing or damaged safety signs.
Be sure new equipment components and repair parts include the current safety signs. Replacement safety signs are available from your Superior Broom dealer.

Learn how to operate the machine and how to use controls properly. Do not let anyone operate without instruction.

Keep your machine in proper working condition.
Unauthorized modifications to the machine may impair the function and/or safety and affect machine life.

If you do not understand any part of this manual and need assistance, contact your Superior Broom dealer.

Before Operating This Machine

Read this manual completely. It contains information on safety and maintenance procedures which must be followed to insure years of trouble free service.

! Read and understand the following warning labels before operating this machine!

If you do not understand these warnings, do not operate this machine!

The seat belt and roll over protection structure were designed to be used together to prevent operator injury in the event of an accident. The seat belt must be worn at all times in order to hold the operator in place so that the roll bar can protect the operator. Adjust the slack out of the seat belt by pulling the unused portion of the belt to the left. The belt should fit snug over the operator's hips.

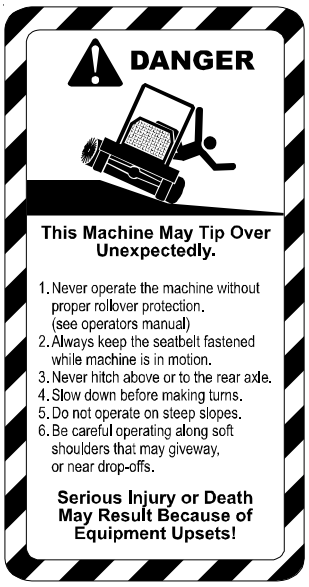

The pedal beside the operator's right foot is not a throttle. If this pedal is depressed while starting the engine, the machine could move forward or backward before the operator is ready. This could cause injury to bystanders and/or damage to property.

Although a high travel speed is available with the Superior Broom, we caution all operators to use good judgment while roading this machine, especially on rough roads.

Do not allow bystanders near the rotating brush, serious injury may result.

Be observant of people walking in front of the broom while in operation. Small rocks can soon become missiles capable of serious injury or loss of an eye.

Keep Riders Off Machine: Only allow the operator on the machine. Keep riders off. Riders on machine are subject to injury such as being struck by foreign objects and thrown off of machine. Riders also obstruct operator's view resulting in machine being operated in an unsafe manner.

Practice Safe Maintenance!
Keep Service Area Clean And Dry.

Understand service procedure before doing work.
Never lubricate or service machine while it is moving.

Keep hands, feet, and clothing from power-driven parts.

Disengage all power and operate controls to relieve pressure.

Lower equipment to the ground, stop the engine, remove the key and allow the machine to cool.

Securely support any machine elements that must be raised for service work.

Keep all parts in good condition and properly installed. Fix damage immediately. Replace worn or broken parts. Remove any buildup of grease, oil, or debris.

Disconnect battery ground cable (-) before making adjustments on electrical systems or welding on machine.

OPERATOR QUALIFICATIONS

Operation of this equipment shall be limited to competent and experienced persons. In addition, anyone who will operate or work around this equipment must use good common sense. In order to be qualified, he or she must also know and meet all other requirements, such as:

1. Some regulations specify that no one under the age of 16 may operate power machinery. It is your responsibility to know what these regulations are in your area or situation.
2. Current OSHA regulations state in part: "At the time of initial assignment and at least annually thereafter the employer shall instruct EVERY employee in the safe operation of servicing of all equipment with which the employee is or will be involved."
3. Unqualified persons are to STAY OUT of the work area.
4. A person who has not read and understood all operating and safety instructions is not qualified to operate the machinery.

FAILURE TO READ THIS MANUAL AND ITS SAFETY INSTRUCTIONS
IS A MISUSE OF THE EQUIPMENT.

SIGN OFF SHEET

As a requirement of OSHA, it is necessary for the employer to train the employee in the safe operation and safety procedures with this equipment. We include this sign off sheet for your convenience and personal recordkeeping.

Date	Employer's Signature	Employee's Signature

Start up and propelling:
Caution: operator must be seated with seat belt properly secured while engine is running.

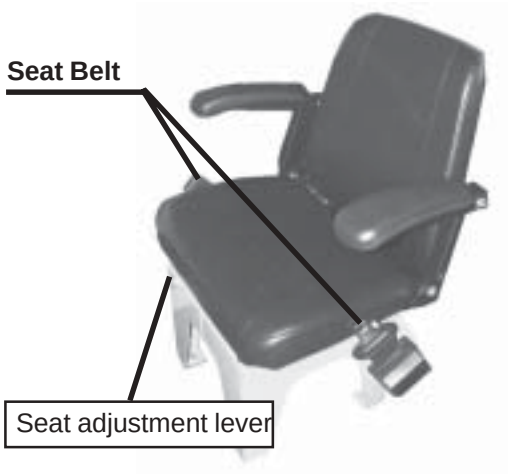

Before starting the engine, adjust the seat to a comfortable operating position. The seat position can be adjusted by moving the lever that is located under the front edge of the seat.

The following engine startup procedures are also included in the Engine Operators Manual that is included with your Superior Broom delivery packet. The operator's manual provided by the engine manufacture takes precedence over the following instructions.

CAUTION: Before starting the engine in a confined building, install proper outlet exhaust ventilation equipment. Always use safety approved fuel storage containers.

NOTE: If temperature is below 32°F (0°C), it may be necessary to use cold weather starting aids (See COLD WEATHER OPERATION, later in this section).

1. Perform all prestarting checks outlined in the engine operators manual.
2. Shift the transmission to neutral & set parking brake.
3. Move the throttle lever to 1/3 open.
4. Turn the key switch clockwise to crank the engine. When the engine starts, release the key so that it returns to the "ON" position.

IMPORTANT: If the key switch is released before the engine starts, wait until the starter and the engine stops turning before re-engaging the starter. This will prevent possible damage to the starter and/or flywheel.

Do not operate the starter for more than 30 seconds at a time, to do so may overheat the starter. If the engine does not start the first time, wait at least 2 minutes before trying again. If engine does not start after four attempts, see Trouble-shooting Section in the Engine Manual.

Should the engine die when operating under load, immediately disengage the transmission and restart the engine. Overheating of turbocharger parts may occur when oil flow is suddenly stopped.

5. Check all gauges for normal engine operation. If gauges indicate other than normal conditions, stop the engine and determine the cause.

To stop the engine, bring the throttle lever to the idle position, then turn the ignition key counter clockwise to the "OFF" position.

IMPORTANT: Before stopping an engine that has been operating at working load, idle engine at least 2 minutes at 1000-1200 rpm to cool hot engine parts.

Warming Engine
IMPORTANT: To assure proper lubrication, operate engine at or below 1200 rpm with no load for 1-2 minutes. Extend this period 2-4 minutes when operating at temperatures below freezing.

1. Check oil pressure gauge as soon as engine starts. If gauge needle does not rise above minimum oil pressure specification of 15.0 PSI within 5 seconds, stop the engine and determine the cause. Normal engine oil pressure is 50 PSI at rated full load speed (1800-2500 rpm) with oil at normal operating temperature of 240°F.
2. Watch coolant temperature gauge. Do not place engine under full load until it is properly warmed up. The normal engine coolant temperature range is 180°-202°F.

NOTE: It is a good practice to operate the engine under a lighter load and at lower speeds than normal for the first few minutes after start-up.

Normal Engine Operation:
Observe engine coolant temperature and engine oil pressure. Temperatures and pressures will vary with changing operating conditions, temperatures, and loads. Normal engine coolant operating temperature range is 180°-202°F.

If coolant temperature rises above 234°F, reduce load on engine. Unless temperature drops quickly, stop engine and determine cause before resuming operation. Operate the engine under a lighter load and at slower than normal speed for first 15 minutes after start-up.

DO NOT run engine at slow idle. IMPORTANT: Should the engine die while operating under load, immediately remove load and restart the engine. Overheating of the turbocharger parts may occur when oil flow is stopped. Stop engine immediately if there are any signs of engine malfunction.

Symptoms that may be early signs of engine problems are:

Sudden drop in oil pressure
Abnormal coolant temperatures
Unusual noise or vibration
Sudden loss of power
Excessive black exhaust
Excessive fuel consumption
Excessive oil consumption
Fluid leaks

Cold Weather Starting: (Engine)

Engines may be equipped with coolant heaters, or ether injectors as a cold weather starting aid. Starting aids are required below 32°F. They will enhance starting performance above these temperatures and may be needed to start applications that have high parasitic loads during cranking and acceleration to idle.

CAUTION: Ether injector starting fluid is highly flammable. DO NOT use starting fluid on engines equipped with air intake heaters.
DO NOT use starting fluid near fire, sparks, or flames. DO NOT incinerate or puncture a starting fluid container.

Using correct grade of oil (per engine and machine operator's manual) is critical to achieving adequate cold weather cranking speed.

1. If a block heater is used, proceed with a normal starting sequence as outlined in the "Start up and propelling" paragraph on page 5.
2. If an ether injector is used, proceed with a normal starting sequence as outlined in the "Start up and propelling" paragraph on page 5. Activate the ether injector button as the starter is being engaged.

Additional information on cold weather operation is available from your authorized servicing dealer.

Service - engine

Check engine oil level at the start of each day before using the broom.

Change engine oil and filter the first time before reaching 100 hours of operation, then every 250 hours thereafter.

Refer to engine manual for additional information concerning time intervals and specifics.

Cold Weather Starting: (System Hydraulics)

1. Do a thorough walk around of the machine
2. Get in the machine and make sure the parking brake is engaged and your foot is not on the pedals. Turn the key to the ON position (first clockwise position) let the engine preheat, the glow plug symbol will go out (roughly 5-10 seconds depending on temperature. Once this is done you will then turn the key to the start position and start the machine. Depending on the ambient temperature the preheat process can be done 2 or 3 times to ensure the cylinders or air is warm enough to let the machine start.
3. Let the engine run for at least 5 or 10 Minutes or until the temperature gauge in the cab starts to show the engine is heating up.
4. Turn the brush under the machine ON by pressing the ON/OFF button on the joystick (Top left Button) and then hit the button with the rabbit on the joystick (Bottom Right) and increase the speed to the 3rd indicator light on the panel (indicator lights are right below the joystick (RED LED).
5. Let the machine warm up with the engine running and the Brush (Main Brush) spinning for Approx. 15 min (Estimate). We have 2 indicators and the first is the resistance gauge on the Hydraulic Fill housing (it should read near the bottom when warmed up (lower Green)), the second is the sight glass thermometer as an indicator. (example 40 degree F reading).
6. Once the machine has warmed the engine and the Hydraulics up to an acceptable operating temperature then operate all functions on the brush to ensure that warmer oil is in all the cylinders (UP/DOWN, LEFT/RIGHT several times). Also turn the steering wheel to the stops 10 times to get Warm oil in Cylinder.
7. Release the emergency brake to allow the machine to move, press the forward pedal or the reverse pedal to move the machine. Proceed with caution as this machine is 100% driven with Hydraulic pressure. With that being said, the oil in COLDER temperatures is thicker, and the thicker the oil gets the less responsive a machine will be.
8. The machine can be operated at a lower rpm (which is suggested for the first few minutes) If moving the machine a short distance there is no reason to idle the engine up to full RPM as the Hydrastic pump needs to displace the oil within it to the warmer oil from the process above.
9. It is very important that the machine be properly warmed up and it is the operators sole responsibility to make sure this is achieved for safe operation

The engine “Operator’s and Maintenance Manual” are supplied by the engine manufacture and are included in the Superior Broom “Owner/Operators” delivery packet. However in the event the engine manual becomes lost or separated from the broom operator’s manual the following information needs to be recorded.

++++++++++++++++++++++++++++

Perkins Engine Serial No:_____

++++++++++++++++++++++++++++

CAT Engine Serial No:_____

++++++++++++++++++++++++++++

The John Deere data plate is located on the right-hand side of the cylinder block behind the fuel filter. Each engine has a 13-digit serial number and a model number.

John Deere Engine Serial No:_____

John Deere Engine Model No: _____

In additon to the above engine information, the injection pump make, model, and serial number should also be recorded.

Make:_____

Model:_____

Serial No. _____

Other information on the data plate:_____

_____

_____

_____

Service intervals - Refer to the engine owners manual for the recommended service intervals.

Lubrication and Maintenance Service Intervals								
Procedure	**Service Item / Area**	**Daily**	**First 50 Hours**	**First 150 Hours**	**250 Hour/6-Months**	**500 Hour/12- Months**	**2000 Hour/24-Months**	**As Required**
Check	Engine Oil and Coolant level	x						
	Hydraulic Oil level	x						
	Fuel Filter/Water Separator Bow l	x						
	Air Cleaner Dust Unload-er Valve & Indicator	x						
	Fluid Level in Tw o-Speed Gearbox		x					
	Engine Mounts				x			
	Manual Belt Tension-er and Belt Wear				x			
	Brake Pads for Wear					x		
	Air Intake Hoses, Connections, & System					x		
	Automatic Belt Tension-er and Belt Wear					x		
	Engine Electrical Ground Connection					x		
	Cooling System					x		
	* Crankshaft Vibration Damper (6.8 L Eng.)						x	
	Check and Adjust Engine Valve Clearance						x	
Change	Tw o-Speed Gearbox Oil (#1)			x		x		
	Engine Oil and Replace Oil Filter			x	x			
	Hydraulic Oil and Replace Filter			x	x			
	Filters		x		x			
Lubricate	Rear Axle Assembly (10 Lube Points)				x			
	Drive Shaft (3 Lube Points)				x			
	Repack Wheel Bearings						x	
Service	Service Fire Extinguisher				x			
	Service Battery				x			
Clean	Clean Crankcase Vent Tube				x			
	Flush Cooling System						x	
Replace	Replace Fuel Filter Element			x		x		
	Replace Air Cleaner Elements			x				x
	Replace Fan Belt							x
Test	Coolant Solution Analysis - Add or Replace					x		
	Pressure Test Cooling System					x		
	Test Thermostats						x	
	Add Coolant							x
Inspect	Perform Visual Walk-around Inspection				x			
	Rear Axle Pivot Bushings					x		
Boxes that are shaded, are engine service areas								
1. Change tw o-speed gearbox oil every 200 hours after initial 100 hour oil change.								
(*) Applies to John Deere engine only								

Important:
recommended service intervals are for normal operating conditions. Service more often if engine is operated under adverse conditions. Neglecting maintenance can result in failures or permanent damage to the engine.

The Superior broom is hydrostatically driven. The directional control is achieved through use of a control pedal, located near the operator's foot.

The left pedal (closest to the operator) directs the machine forward.

The right pedal shifts the travel to reverse.

Rate of travel is governed by the distance the pedal is depressed. The pedal will return to neutral when the pressure is released.

Caution

1. To start the engine refer to the **Start up procedures** on page 5.
   Keep the brake pedal depressed while starting the engine. Do not place your foot on the directional control pedal until the engine is running and the transmission has been shifted into gear.

2. Choose the desired gear using the two-speed shifter (ref.7) located on the right hand side of the dashboard. Low gear is normally use while sweeping in order to maintain sufficient engine RPM. to run the hydraulics. Leave the two speed in first gear until the operator is familiar with the machine. High gear is used during light sweeping and while roading the machine.

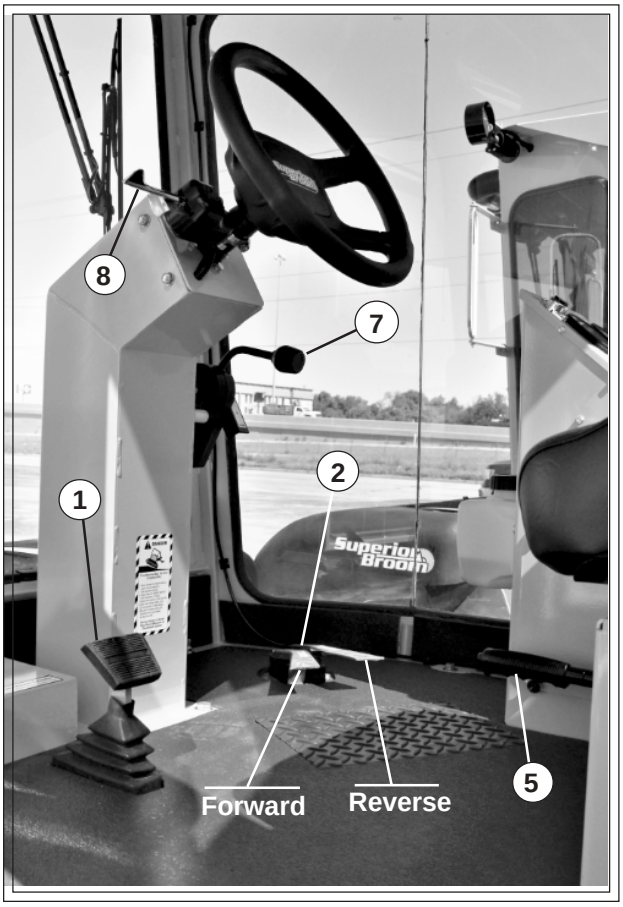

3. After gear selection, raise engine RPM to about half throttle. Release parking brake. Slowly depress control pedal in the desired direction. Engine speed may be adjusted to obtain desired travel speed.
4. Do not propel this machine with the parking brake engaged. This will damage the rear brake assemblies and void the warranty. This type of operation is considered abuse.
5. Do not overspeed! Although a high travel speed is available with the Superior Broom, we caution all operators to use good judgment while roading the machine, especially on rough roads.
6. If the control pedal is released while traveling, the machine will slow down rapidly. This is called "dynamic braking'. Using dynamic braking at low speeds is fine as long as the operator is ready to use the brake pedal (ref.1) if needed. At higher speeds, however, the operator must use the brake pedal in conjunction with the hand throttle and control pedal in order to minimize strain on the drive train. This will prolong the life of the entire drive train.
7. Do not reverse the direction of travel while the broom is in motion. This will damage the drive train and void the warranty. This type of operation is considered to be abuse.

IMPORTANT

Familiarize yourself with all controls before operating this machine.

1. **Brake pedal**
2. **Directional control pedals**
3. **Joystick (Broom control)**
4. **Throttle**
5. **Parking brake**
6. **Ingnition switch**
7. **Two speed shift lever**
8. **Turn signal lever**
9. **Headlight**
10. **Water system**
11. **Strobe light**
12. **Work lights (optional)**

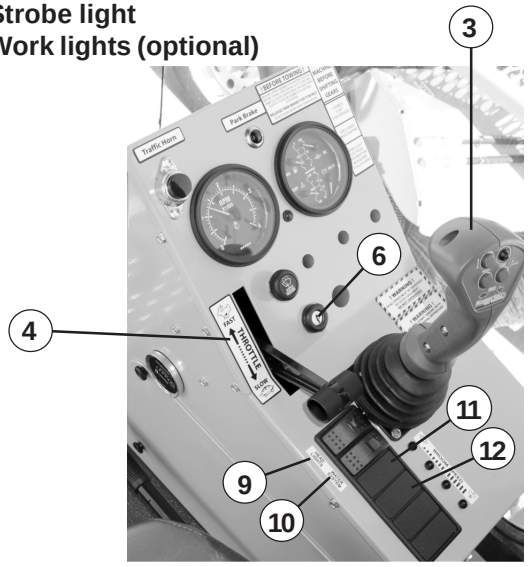

To stop the engine, turn the key back to the center position. The parking brake must be set prior to leaving the operator's seat.

Operation of the Sweeping Core:
The Joystick located to the right of the operator, controls all functions of the sweeping core. Refer to the illustrations below.
Power is supplied to the Joystick when the ignition switch is turned on.

A diagram showing the wiring connections between the "Joystick" and the hydraulic "Solenoid Valves" manifold is shown on pages 18 & 19.
A trouble shooting guide is on page 17.

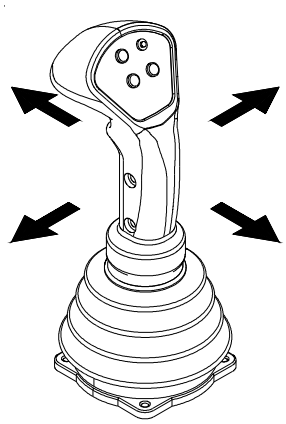

Right / Left Operation Of Broom:
The core may be set at any angle from 45º left to 45º right, simply by moving the Joystick side to side.

Raise / Lower Broom:
To raise the core, pull the Joystick back.
To lower the core push the Joystick forward.

Float Position:
During normal sweeping conditions, engage the float position with the **"**Float**"** trigger.
The green light on the Joystick will light when the broom is in the "Float" mode.
The **"**Float**"** position will allow the core to maintain the ideal contact with the road while allowing it to float over bumps or contours in the road surface.
Down pressure should only be used when greater pressure is required on the bristles. It should only be used under the heaviest sweeping conditions.

Important, operator must maintain continuous adjustment on core while the down pressure option is being used. This feature does not allow the core to float over contours in the road surface. Therefore the operator must constantly make these adjustments. If the broom core is forced too close to the ground, the bristles will not have the "flicking" action, which is necessary to do a proper sweeping job. This is why we recommend using the float detent during all but the heaviest sweeping conditions.
Caution: overuse of the positive down pressure feature will cause excessive wear and shorten the life of the broom.

Broom On / Broom Off:
To core motor is turned **ON** & **OFF** by the top left button on the Joystick as shown in the illustration.

The broom speed is adjusted by means of the two lower buttons on the Joystick.

Note: engine speed must be maintained at a minimum of **1500 RPM** for sweeping operations. Under average sweeping conditions, a higher engine speed will probably be advantageous.

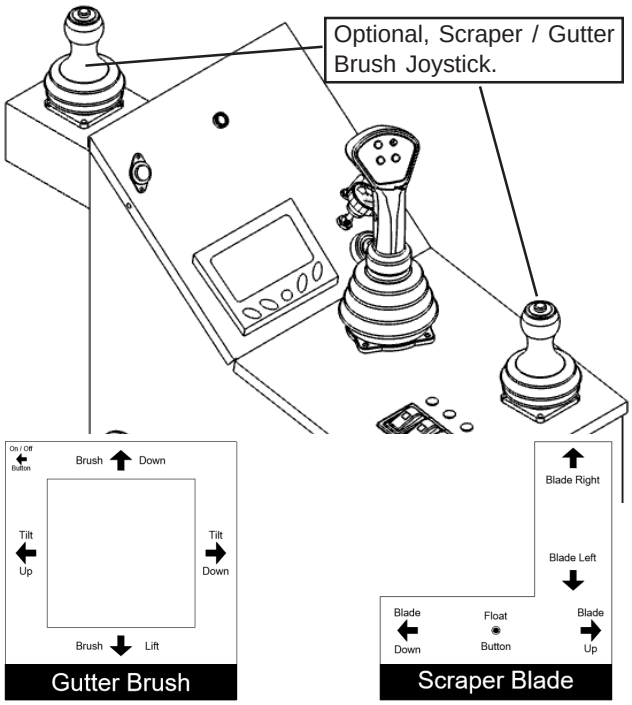

Optional Scraper Control Panel Functions:
The joystick for the "Scraper Blade" option is located on the operator's control console.
The "Left" and "Right" movement of the blade is controlled by moving the joystick forward and back.
The "Up" and "Down" movement of the blade is controlled by moving the joystick side to side. The blade float is activated by button on top of the joystick.

Optional Curb Broom Control Panel Functions:
The joystick for the "Gutter Brush" option is located at the top of the operator's control console.
The broom is turned on and off by the button located at the top of the joystick.
The curb broom has no speed control.
The curb broom is raised and lowered by the forward and back movement of the joystick. The tilt of the broom is controlled by the side to side movement of the joystick.

The "Float" switch is a push-on / push-off switch. A yellow indicator light will illuminate when the float valves are energized. However if the float function is on and either the lift or down control is activated the float valves will be turned off and the float indicator light will turn off.

Sweeping Tips:
If the broom starts to "hop" or "bounce", the propelling speed is too high, slow the machine down, but maintain high engine speed. Slowing the forward speed of the machine down will prevent you from having to make a second pass with the broom.
In areas where the dirt is "caked", try to clean it by going over it a second or third time. If this does not clear the dirt, use the "DOWN PRESSURE" feature. In most cases, the float position will yield the best results. When changing the direction of travel, allow the machine to come to a complete stop before moving the directional control pedal. Failure to completely stop the machine before changing direction can cause premature failure of the drive components. If the dust cloud becomes so thick that it obscures your vision of the road, use the water sprinkling system (if installed), or stop the machine until the dust clears. If possible, angle the sweeper so that the dust and debris is swept downwind.

When operating a broom without an enclosed cab, wear hearing and eye protection as well as a dust mask that covers both the mouth and nose.

Caution

The operator must be aware at all times of any people, vehicles, or any other objects which might be in the path of flying debris from the sweeper. The sweeper can throw small rocks and other objects several feet. This debris can cause serious injury to people and damage to property. Always check that the area around and in front of the broom core is free of obstructions before adjusting the broom angle or activating the core.

Maintenance:
The manufacture has endeavored to build the Superior Broom as maintenance free as possible. The service points are easily accessible and are similar to those on many other types of construction equipment. This section will cover many of these points in some detail and will briefly mention those which should be standard on all equipment.

Air Cleaner:
The air cleaner is one of the most important components of this machine. Due to the extremely dusty conditions in which this machine operates, the air cleaner must be maintained constantly. This machine is equipped with a dry type dual element air cleaner, vane type pre-cleaner and a restriction type service indicator as standard equipment.

Under average conditions, the air cleaner will need to be serviced every three to four hours. When the clear ring on the **service indicator** turns red, the air cleaner must be serviced immediately. The following procedures must be followed to ensure long engine life.

To service: Loosen the clamp which secures the end

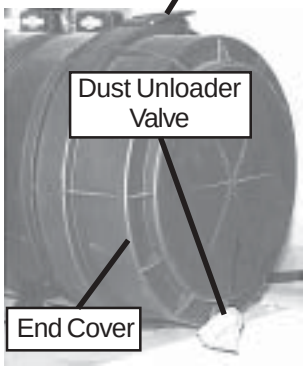

cover. Remove the end cover and the wing nut that secures the filer element. Carefully slide the element out of the canister. The machine is equipped with a dual element air cleaner, **do not** remove the safety element until you are ready to replace it! **Do not** attempt to clean the safety element. It is strictly a disposable type element. Clean the dirt from the inside of the canister and the end cover. Hold the element so that the opening is on top, with your other hand, gently pat the side of the element to loosen the dirt. **Do not** tap the element against a hard surface as this can cause damage to the element itself. Air pressure may be used to clean dirt from the element, but the air-pressure must be reduced to less than 30 PSI. Using an air nozzle, clean the element from the inside, moving the nozzle up and down in the direction of the pleats. **Do not** direct the air-stream against the outside surface of the element, as it will force the dirt through the element fabric, resulting in damage.

Caution

When using compressed air, clear the area of bystanders, guard against flying chips, and wear personal protection equipment including eye protection.
The element may be cleaned by the following procedure: If element is coated with oil or soot, wash in a solution of warm water and filter element cleaner. Let the element soak at least 15 minutes, then agitate gently to flush out dirt. Rinse element thoroughly from the inside with clean water. Use an element cleaning gun or a free running hose. Keep the pressure under 40 PSI to avoid damage to the element. Allow the element to dry completely before using. This usually takes from one to three days.

Do not oven dry or use drying agents. Protect element from freezing until dry. The element must be inspected before it is reinstalled. Hold a bright light inside the element and check carefully for holes. Discard any element that shows the slightest hole.

Be sure that the outer screen is not dented. Vibration will quickly wear a hole in the filter. Make sure the filter gasket is in good condition. If gasket is damaged or missing, replace the element. Seal the element in a plastic bag and store in a shipping container to protect against dust and damage.

Hydraulic System:
The hydraulic system on this machine operates the hydrostatic drive, power steering, and all core functions. It incorporates two supply pumps sharing the same reservoir. In order to simplify the description of this system, it will be separated into three different parts.

Hydrostatic drive:
This system utilizes a variable displacement pump and fixed displacement motor. Oil, supplied from the reservoir, passes through a 10 micron filter before entering the pump. High pressure oil is supplied to the motor through high pressure hoses. A hot oil shuttle has been installed between the pump and motor to ensure that a specific amount of oil is removed from the high pressure loop so that it may be replaced by cooler oil.
The hot oil removed from the loop by the shuttle is routed back to the pump where it will join the unused oil in the case drain. The case drain from the motor is routed to

join this return flow. All oil returning to the reservoir is passed through a heat exchanger. The following specifications are for testing and informational purposes only. If a problem develops with the pump or motor, we strongly advise that it be taken to an authorized repair center.

Displacement:	2.48 cubic inches
Volume:	Approx. 34 GPM @ 2500 RPM
Maximum pressure:	4500 PSI.
Continuous pressure:	3000 PSI.
Maximum case pressure:	75 PSI.
Continuous case pressure:	50 PSI.
Charge pressure:	220-240 PSI.

Caution!

When it becomes necessary to add or change oil in this system, extra care must be taken to protect the fluid from contamination. Take every precaution when changing a filter or a hose. Clean the area of the machine where the replacement will take place. Never leave a port uncovered on the pump or motor where dirt can enter the system. The slightest contamination can cause the pump and / or motor to fail.

Power steering:

A single hydraulic pump supplies oil for both the power steering and the core functions. A load sensing priority valve supplies the orbital type steering unit with 5 GPM max. (on demand). This steering unit supplies oil to either side of the two-way steering cylinder as directed by the operator. Return oil is passed through a 10 micron filter before entering the reservoir.

Core functions:

The core drive uses a Char-Lynn motor with a splined shaft which couples to a hub mounted inside the core frame.Hydraulic oil is supplied to this motor by the same pump that supplies oil for the power steering. Oil is supplied at the rate of 12-18 GPM, depending on engine speed. This oil is routed directly to a control manifold with electronically controlled valves.

The open center passage in the valve is closed off when a spool is fully shifted. Hydraulic oil will flow directly to the power core passage, making oil available to all work ports. If two or more spools are fully shifted at the same time, the oil will flow to the path of least resistance, and the hydraulic cylinder or motor with the lightest load will begin to function first.

This valve is equipped with a non-adjustable relief valve. This relief setting governs all hydraulic oil pressure used to operate core functions. Restrictor fittings are used in the hydraulic lines attached to the lift and shift cylinders in order to meter the flow thus controlling the speed of expansions and contraction.

On standard applications, the oil is routed from the valve to the core motor and returned to the reservoir through a 10 micron filter. This routing allows for single direction core operation only. This is done to maintain core balance on the pivot type core suspension used on this machine. This is the most efficient manner in which to obtain the superior cleaning capabilities of this machine. The following specifications relate to the hydraulic pump used on the power steering and core functions. These figures may be of service if trouble shooting becomes necessary.

Displacement:	2.77 cubic inch
Volume:	Approx. 30 GPM @ 2500 RPM
Priority controlled flow:	5 GPM

Hydraulic maintenance:

1. Replace the disposable filter elements after the first 50 hours of service, and every 500 hours thereafter.
2. Always maintain sufficient hydraulic oil in the reservoir as indicated in the level sight glass on the left side on the hydraulic tank. When it becomes necessary to add or replace oil in the system, use an oil comparable to **CONOCO 46 Super Hydraulic Oil** or equivilant, which is in the machine at the time of delivery.
3. Periodically check all hydraulic hoses. If any hose feels “spongy” or shows signs of wear or chafing it must be replaced. As a general guide, if you are unsure of the condition of a hose for any reason, it should be replaced before the machine is sent out on a job. This will minimize downtime and expense associated with this type of failure. Again, cleanliness must be stressed during this type of maintenance. Contamination of this system will cause pump and / or motor failure. Avoid servicing hydraulic system in the field where a clean environment cannot be controlled.
4. Due to the dusty conditions in which this machine operates, the heat exchanger and radiator must be cleaned every 4 to 8 hours of service, depending on sweeping conditions. If either one becomes clogged with dirt, it will overload the cooling capacity of the other, causing both the engine and hydraulic system to operate at higher than acceptable temperatures. Use water or compressed air directed from the engine side of the radiator to remove dirt build up. The engine must be completely stopped while performing this maintenance. Inspect radiator and heat exchanger for dirt deposits and / or damage before resuming operation.

Caution

Do not attempt to clean radiator or heat exchanger while engine is running. If hands or equipment come in contact with spinning fan blades, serious injury will result. Engine must be completely stopped.

Lubrication:
Front Axle Assembly:
There are ten lubrication points located on the front axle assembly. Use a standard automotive type grease on each of these. While servicing these points, inspect all ball joints and rod ends for slack. If slack is found in any part of this suspension, including bolster pivot bushings, replace all worn parts.

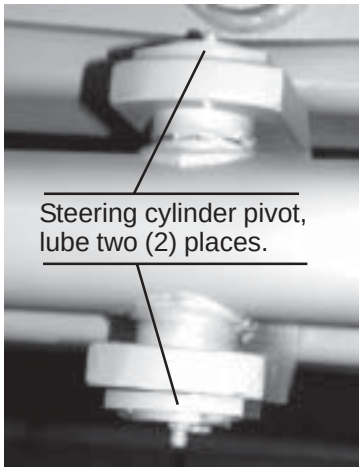

Tie-rod Ball Joints: Lube @ two (2) locations, one (1) place each side.

King Pins: Lube @ four (4) locations, two (2) places each side.

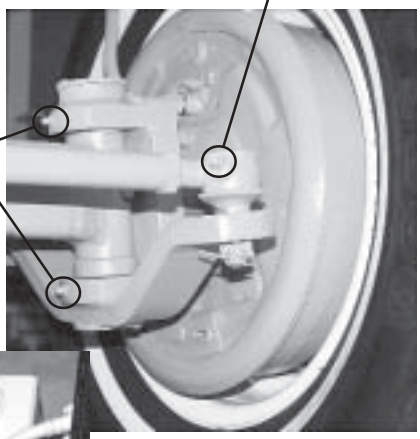

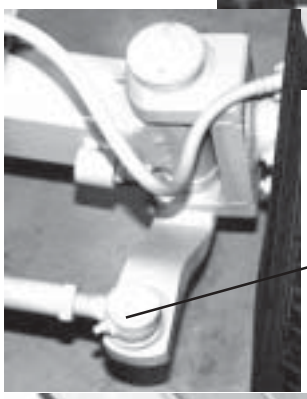

Steering Ball Joints: lube (1) one location.

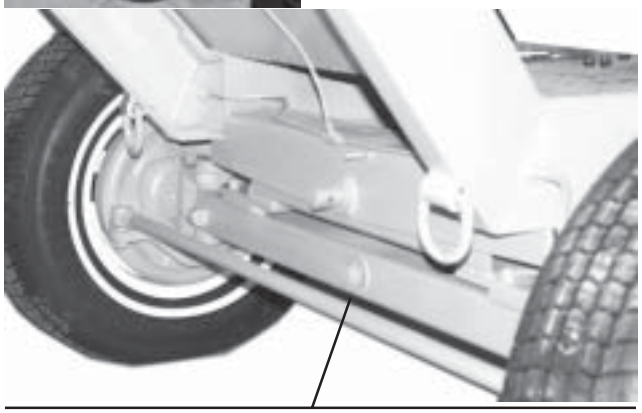

The grease zerk for the steering cylinder pivot bracket is accessed through a hole in the bottom of the axle tube.

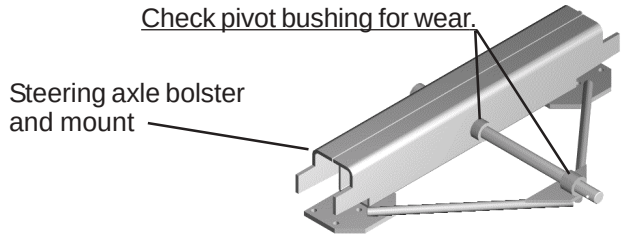

Both the front suspension and drive shaft should be serviced every time the engine is serviced, this is the minimum service interval. A more frequent servicing of these components will extend their service life.

Two-Speed Gear Box & Rear Axle

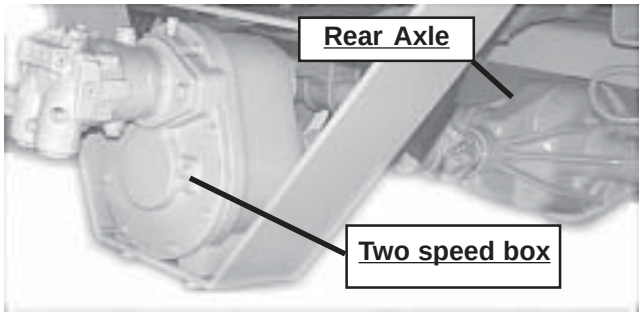

Check the fluid level in the two-speed gearbox every 25 hours or sooner if signs of leakage appear. Change the lubricating oil after the first 100 hours and then every 200 hours thereafter. Drain the oil while the unit is warm. Replace with SAE 85W-140W gear oil, up to the oil level plug.
Service the rear axle in the same manner as the two-speed transmission. The axle bearings do not receive lubrication from the gear oil. Periodically remove the axle shafts and repack the bearings.The rear axle also uses SAE 85W-140W gear oil.
There is no cause for alarm if either of these components is leaking oil through their breathers after they have been serviced. The breather allows overflow if the unit was overfilled. This leakage will stop when the proper level is achieved. With proper maintenance and operation, these components will last the entire life of the machine.

Drive shaft

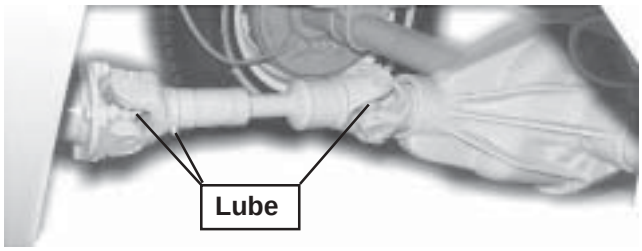

There are three lubrication points on the drive shaft. These also require standard automotive type grease. While servicing drive shaft, check for loose fasteners and slack in the U-joint.

Brakes:
This machine is equipped with four-wheel hydraulic brakes and a mechanical parking brake. The operation of the brakes should be tested daily.

Everyday, before this machine is to be operated, check the brake pedal "feel", much the same way as on an automobile. The pedal should be firm when depressed. If the pedal feels "spongy", it probably means that there is air in one or more brake lines. If the brake pedal goes all the way to the mechanical stop, there is either a leaking line, low fluid in the reservoir, or the brake shoes are worn out. If the brake pedal does not feel firm, the brakes must be serviced prior to operating this machine.

The master cylinder is located directly in front of the brake pedal. Check the fluid level periodically, especially if the brake lines show signs of leakage. If it becomes necessary to add or change the brake fluid, use a fluid with a DOT 3 rating.

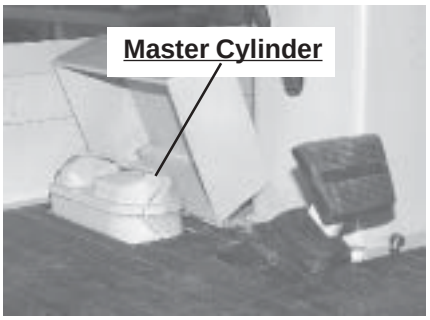

Inspect brake lines every 50 hours (minimum) for leaks and / or damage. Replace front and rear brake hoses every two years. Use standard automotive procedures for "bleeding" the brakes if it becomes necessary.

Caution

Do not allow this machine to be operated with faulty brakes. This will put the operator in extreme danger and could cause bodily injury and property damage.

Inspect mechanical parking brake linkage for proper adjustment, routing and / or damage every 50 hours (minimum).

Fasteners:
Like any construction equipment, this machine requires periodic tightening of fasteners.

During normal engine service intervals, check all nuts and bolts, clevis pins, and clamps. Start at the front of the machine and work to the rear. The following list contains several of the more critical fasteners to be checked. Do not limit your inspection to these fasteners.
Check the condition of the following fasteners.

1. Front bolster mount bolts
2. Bolster pivot pin bolts
3. Tie rod end lock nuts
4. Steering cylinder rod end lock nut
5. Steering cylinder mount bolt
6. Steering wheel nut
7. Brake cylinder mount bolts
8. Brake pedal pivot bolt
9. Core support pins
10. Circle bearing mount bolts
11. Core motor mount bolts (and lock rings on direct drive cores).
12. Pillow block bearing mount bolts
13. Hydrostatic pedal linkage clevis pins
14. Gearbox mount bolts
15. Pump drive mount bolts
16. Engine mount bolts
17. Radiator mount bolts
18. Rear axle mount bolt

This is just a partial list of the bolts on this machine, these should be inspected on a regular basis, the rest of the fasteners on the machine should also be checked periodically.

Frame, Gussets and Welds:
The frame on this machine was designed to withstand normal operating conditions, however under abusive type use, components and welds can fail. Periodically check all frame welds and gussets for development of fatigue cracks. Failure to inspect and maintain the frame and it's components could result in damage to the equipment and serious injury to the operator.

Core Drive:
The Superior Broom direct drive core is laser aligned at the factory and does not need adjusting. If the drive hub begins to show uneven or excessive wear the core will need to be readjusted. A laser alignment tool and instructions are available from the factory.

Towing:
The Superior Broom may be towed to and from the job site without removing the drive shaft. The transmission must be in neutral and the steering cylinder valve in the open position.

Too make certain the 2-speed gearbox is in neutral position before towing, start the engine and shift the gearbox to the neutral position. Now carefully move foot control pedal back and forth slightly to ensure gearbox is in neutral position. Stop the engine and release the parking brake, the broom is now ready for towing.
Do not exceed 45 MPH when towing the broom. Do not attempt sharp turns while towing.

A towbar option is available for the Superior Broom that includes bypass valves for the steering cylinder.

Engine:
The normal engine operation and maintenance procedures are covered in a separate manual, which is furnished by the engine manufacture.
Important: due to the dusty conditions that the Superior Broom operates in, it is recommended that the **engine fan inspection** and replacement be done every

Important: due to the dusty conditions that the Superior Broom operates in, it is recommended that the **engine fan inspection** and replacement be done every **300-400 hours**.

The dusty environment the broom is operating in will result in erosion of the fan blades. The fan will need to be replaced when the blades deteriorate to the point that they do not provide enough air-movement or they become operationally unsafe. This fan blade erosion is considered to be normal wear on this type of equipment.

Tires:

The tire manufacture recommends a tire pressure of **32 PSI**. This will provide the longest tire life. A lower pressure will provide a more comfortable ride, and make rough road conditions easier to negotiate.

Checking your air pressure monthly can help you avoid dangerous tire conditions and save money. Proper inflation pressure is essential for achieving maximum performance and mileage. Improper tire inflation pressure can cause severe internal tire damage, which can lead to sudden tire failure and resulting in serious personal injury or death.

Improper inflation pressure may result in rapid or irregular wear. Pressures should always be checked when the tires are cold and at least monthly. Under normal tire operation, approximately 1psi of tire pressure will escape every month. Also, for every 10 degrees F change in ambient temperature, tire pressure will change by approximately 1psi.

Storage:

When storing the Superior Broom outside, it is recommended that a light coating of oil be sprayed on the wire bristles of the broom core to retard rusting. This only applies to the optional wire cores.

Before shutting the engine off, raise the broom off the ground to prevent a flat spot forming during storage. The electrically controlled hydraulic manifold will hold the lift cylinder in the raised position.

Daily Inspection:

1. Visually inspect the entire machine for damage and fluid leaks.
2. Check all fluid levels; engine oil, radiator and hydraulic reservoir.
3. Check wheels and tires for excessive wear or damage, also check air pressure and lug nut tightness.
4. Check air cleaner service indicator (service if indicated).
5. Seat belt, core cover and rubber rock guard should be installed and serviceable.
6. Lights, windshield wipers, reverse alarm, etc., must be in operating condition.
7. Test brakes before operating this machine.

Any defects or damage found during this inspection must be repaired before operation.

Broom Wafer Replacement:

There are many different techniques that may be used when rebuilding the broom core. The following instructions involve the techniques and equipment employed at Superior Broom Mfg. Inc. These instructions are to be used as a guideline and are not designed to supersede any instructions offered by the broom wafer manufacturer.

The standard Superior Broom core uses 10"x32" flat wafers and metal spacers. The eight-foot core requires 56 wafers and 55 spacers. Convoluted wafers may be used on this core if desired. The amount of wafers required as well as specific installation instructions may be obtained from the wafer manufacture.

Wafer Replacement Instructions:

1. With the core resting on or near the ground, remove the bolts securing the pillow block bearing to the core support frame.
2. Pull the core to the right side of the machine until you feel the splined hub come off the shaft. At this time, the core will be close to or touching the right support arm.
3. Angle the core toward the rear of the machine and slide it out from under the sweeper.
4. Clean the spindle from the lock ring out.
5. Loosen the setscrew and remove the “D-Lok” ring and pillow block bearing.
6. Remove the spindle and install the Superior Core Service Ring in its place.
7. Remove the end cap from the drive end of the core.
8. Using a hoist or winch with a minimum capacity of 1,000 lbs., raise the core approximately 6 to 8 inches off the floor.
9. Using a pry bar or similar tool, start at the bottom of the core and work the wafers loose. Do not attempt to use a cutting torch to remove the wafer, as this could result in a fire.
10. Lower the core and remove the service ring. Reinstall the spindle. Loosen the four bolts securing the end cap until they are flush with the inside of the core end plate. This will leave approximately one inch of play in the end cap.
11. Using the Superior Core Service Stand, stand the core upright, with the end cap on the bottom. If this stand is not available, fabricate a similar device, which will securely hold the core in place. *The stand is designed for use on a hard level surface. It may be easily transported using a small forklift and is ideal for storing a spare core.*
12. Locate the service stand approximately one foot from a loading dock or other similar platform that will provide stability and will enable you to reach the top of the core.
13. Begin filling the core with a ply wafer, and then a spacer. Keep adding poly wafers and spacers in an alternate sequence until the core is filled. If there is

not enough space left at the end for both a spacer and ply wafer, finish out with a ply wafer to finish filling. When assembling a half poly and half wire core, or an all wire core, begin with a poly wafer and end the fill with a poly wafer. This will minimize unnecessary damage to the support frame and will add stability to the wire wafers near the end of the core. When building a half-and-half core, the pattern should be; poly wafer, spacer, wire wafer, spacer, and then repeat the sequence. If this pattern ends at the top with a wire wafer, substitute a poly wafer.

Each wafer has a locking tab located on the inside of the crimp ring. This tab will lock the wafer against the core frame tubes to keep it form spinning on the core. To ensure proper core balance, rotate this tab 90º from the previous wafer. This will ensure even weight distribution on all four sides of the core.

14. Install the end cap using two ½" x 3" all thread bolts in two of the holes which are 180º apart. Slowly and evenly tighten these until the end cap is close enough to the core to install the standard mounting bolts. Start two of the standard bolts with lock washers in the two remaining holes. Remove the two long bolts and install the other two standard mounting bolts. Tighten all four bolts evenly in a criss-cross fashion until the end cap is tightly secured to the core.
15. The core can now be laid over onto the ground so that the core comes to rest laterally on the bristles. Clear an area fifteen feet in all directions of the core of personnel and property before laying the core over. Always lower the core by means of a hoist. Never attempt to pull the core over. Carelessness in this procedure could result in serious bodily injury and/or property damage.
16. With the core resting on the ground, slide the stand off of the spindle and tighten the end cap in the same fashion as before.
17. Using emery cloth or sandpaper, clean the spindles to remove any burs or tar which may interfere with bearing installation.
18. Raise the core support frame and slide the rebuilt core under the sweeper. The core will have to come in from an angle in order to be started over the motor mount. Once the core has been started onto the motor mount, swing the right side under the right support frame.
19. Lower the support frame slowly until the motor mount is centered in the core.
20. Using a back and forth twisting motion, pull the core onto the splined shaft.
21. Install the pillow block bearing on the right side of the core using the original mounting bolts.
22. Raise the core. Slide the core to the left as far as it will go. Using a pry bar, slide it back to the right until the bolts on the end cap will clear the hydraulic hose fittings.
23. Install the Dodge "D-Lok" bearing on the spindle securely. This "D-Lok" is all that maintains core alignment.

Important:

Do not slide the core drive coupler all the way onto the splined shaft of the core drive motor.

There should be 1-1/2" of shaft extending past the pillow block bearing race that is located at the opposite end of the broom core.

The drive hub should be mounted so the hub splines do not entirely cover the splines on the core motor.

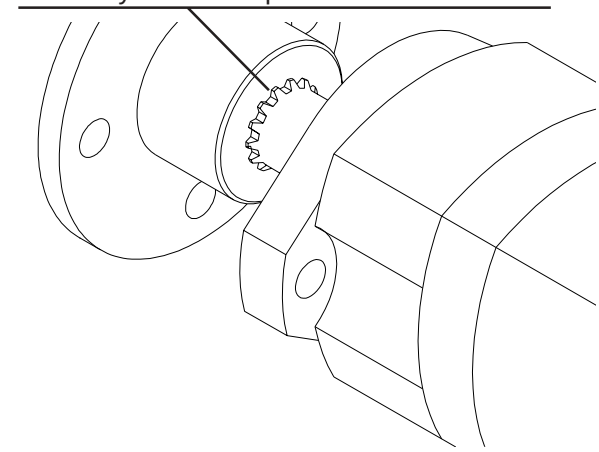

Do not try to readjust the motor mount unless it becomes damaged or otherwise unserviceable. The alignment on this mount is preset at the factory. If it does become necessary to realign the mount contact the factory for the lazer alignment kit and instructions.

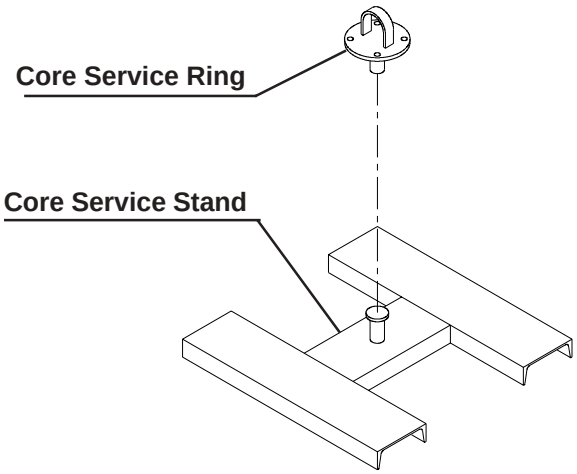

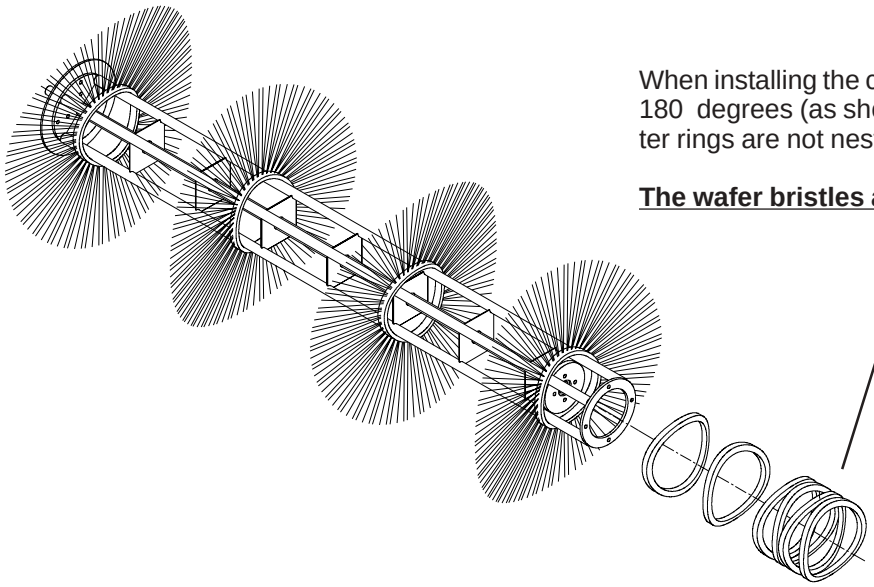

When installing the convoluted wafers, turn each wafer 180 degrees (as shown in the illustration), so the center rings are not nested together. 48 wafer required.

<u>The wafer bristles are not shown for clairity</u>.

Wiring Diagram / Broom Joystick Control to Hydraulic Manifold

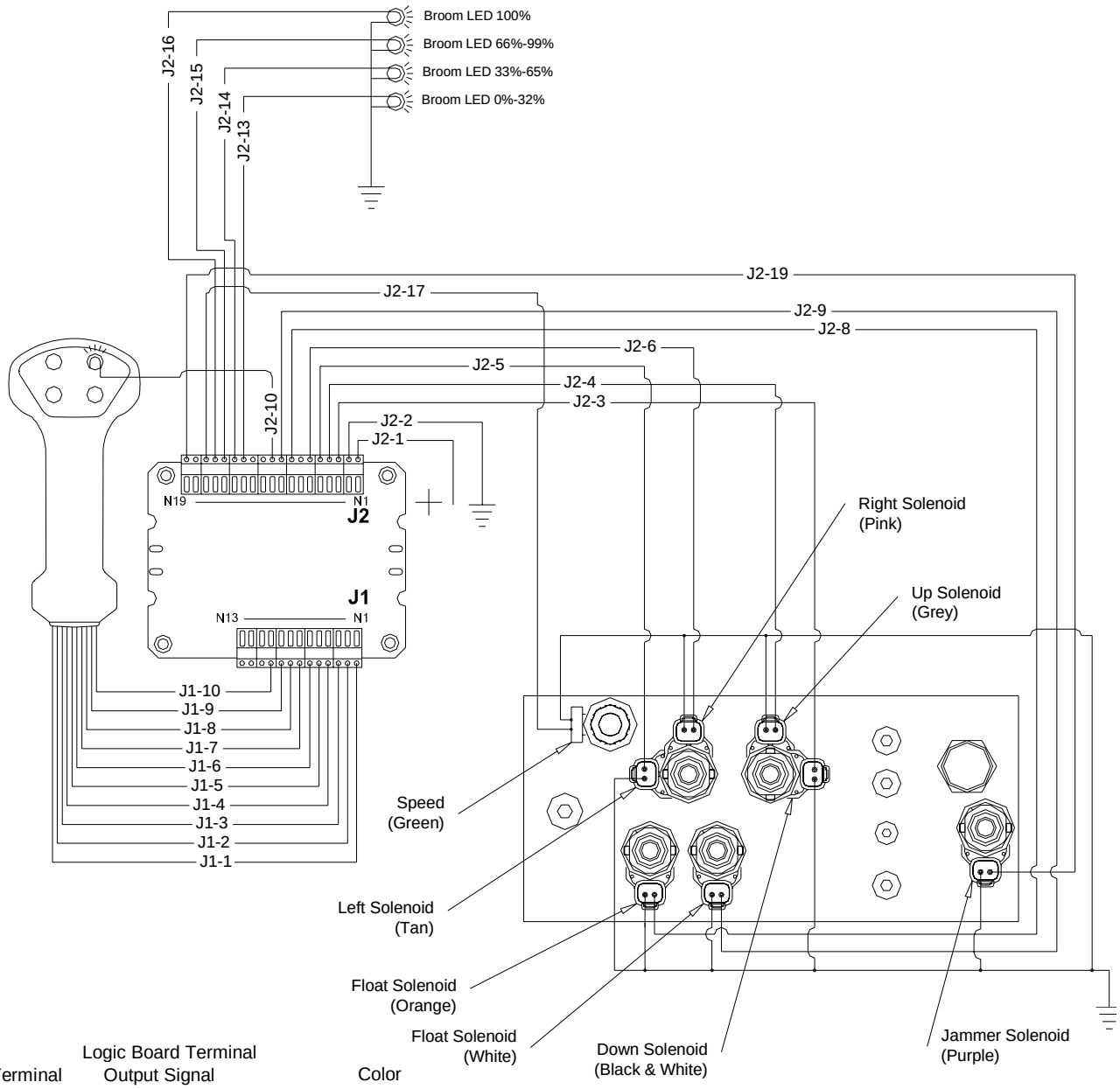

Logic Board Terminal

Terminal	Output Signal		Color
J2- 1	24V Power Supply In		
J2- 2	Ground		
J2- 3	Output 1	Broom Down	Black/Whit
J2- 4	Output 2	Broom Up	Grey
J2- 5	Output 3	Broom Left	Tan
J2- 6	Output 4	Broom Right	Pink
J2- 7	Output 5		
J2- 8	Output 6	Broom Float #1	Orange
J2- 9	Output 7	Broom Float #2	White
J2- 10	Output 8	Broom Float LED	Blue
J2- 11	Output 9		
J2- 12	Output 10	Broom 0% LED	
J2- 13	Output 11	Broom 33% LED	Yellow
J2- 14	Output 12	Broom 33%-66% LED	Green/Whi
J2- 15	Output 13	Broom 66%-99% LED	Red/White
J2- 16	Output 14	Broom 100% LED	Pink/White
J2- 17	Output 15	Broom Rotate	Green
J2- 18	Output 16		
J2- 19	Output 17	Jammer Valve	Purple

Joystick Harness Connection

Terminal	Input Signal		Harness Connection from Handle
J1- 1	24V Common to Handl		Red (Switch Common)
J1- 2	Ground to Handle		Black (Ground)
J1- 3	Input 1	JS Back	Black/White (Broom Down)
J1- 4	Input 2	JS Forward	Grey (Broom Up)
J1- 5	Input 3	JS Left	Tan (Broom Left)
J1- 6	Input 4	JS Right	Pink (Broom Right)
J1- 7	Input 5	JS	White (Broom Speed Down)
J1- 8	Input 6	JS	Brown (Broom Speed Up)
J1- 9	Input 7	JS	Green (Broom On/Off)
J1- 10	Input 8	JS	Orange (Broom Float)
J1- 11	Input 9	JS	
J1- 12	Input 10	JS	
J1- 13			

Wiring Diagram / Curb Broom & Scraper Blade / Valve Control Module to Hydraulic Mani-

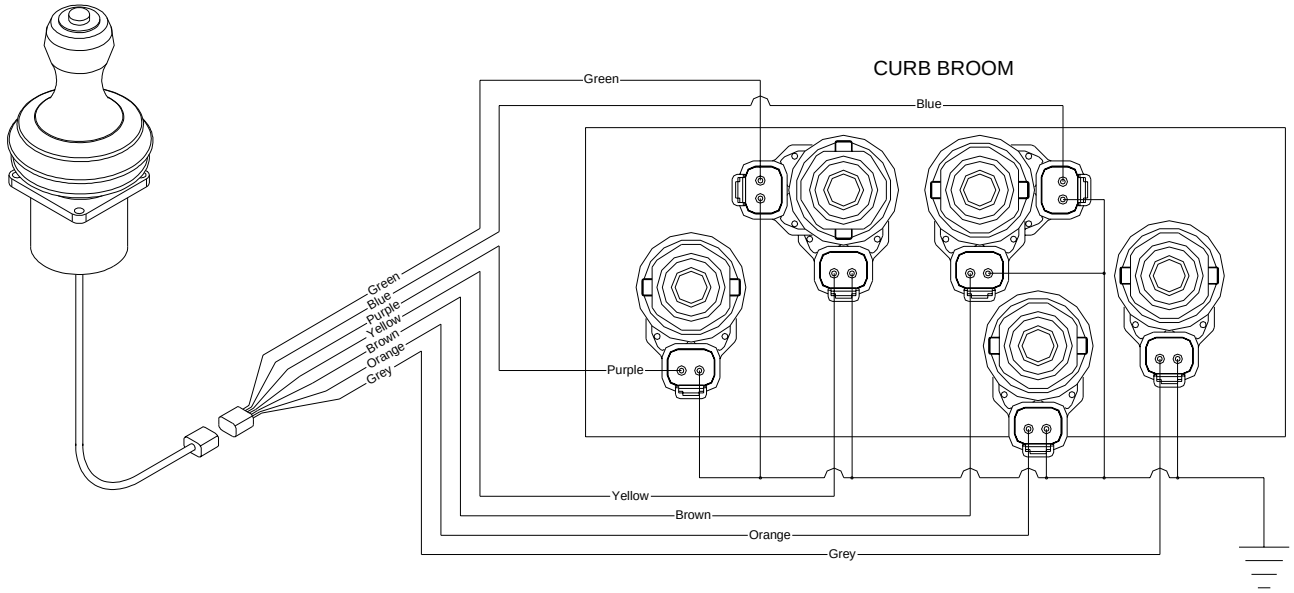

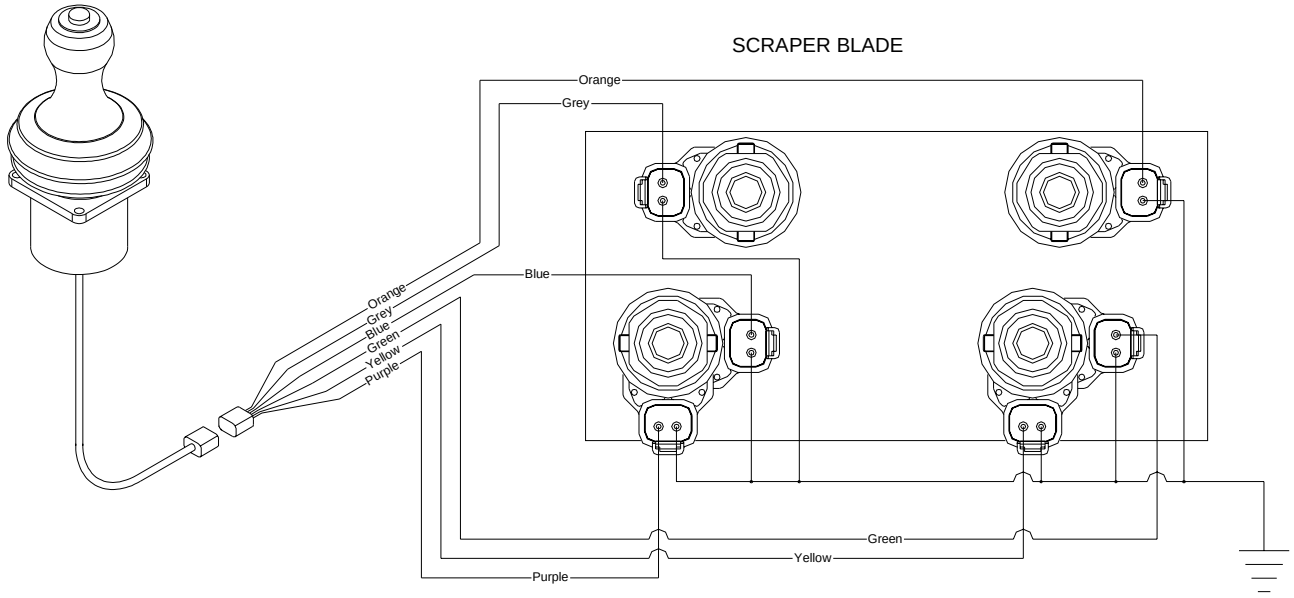

Hydraulic Hose Schematic

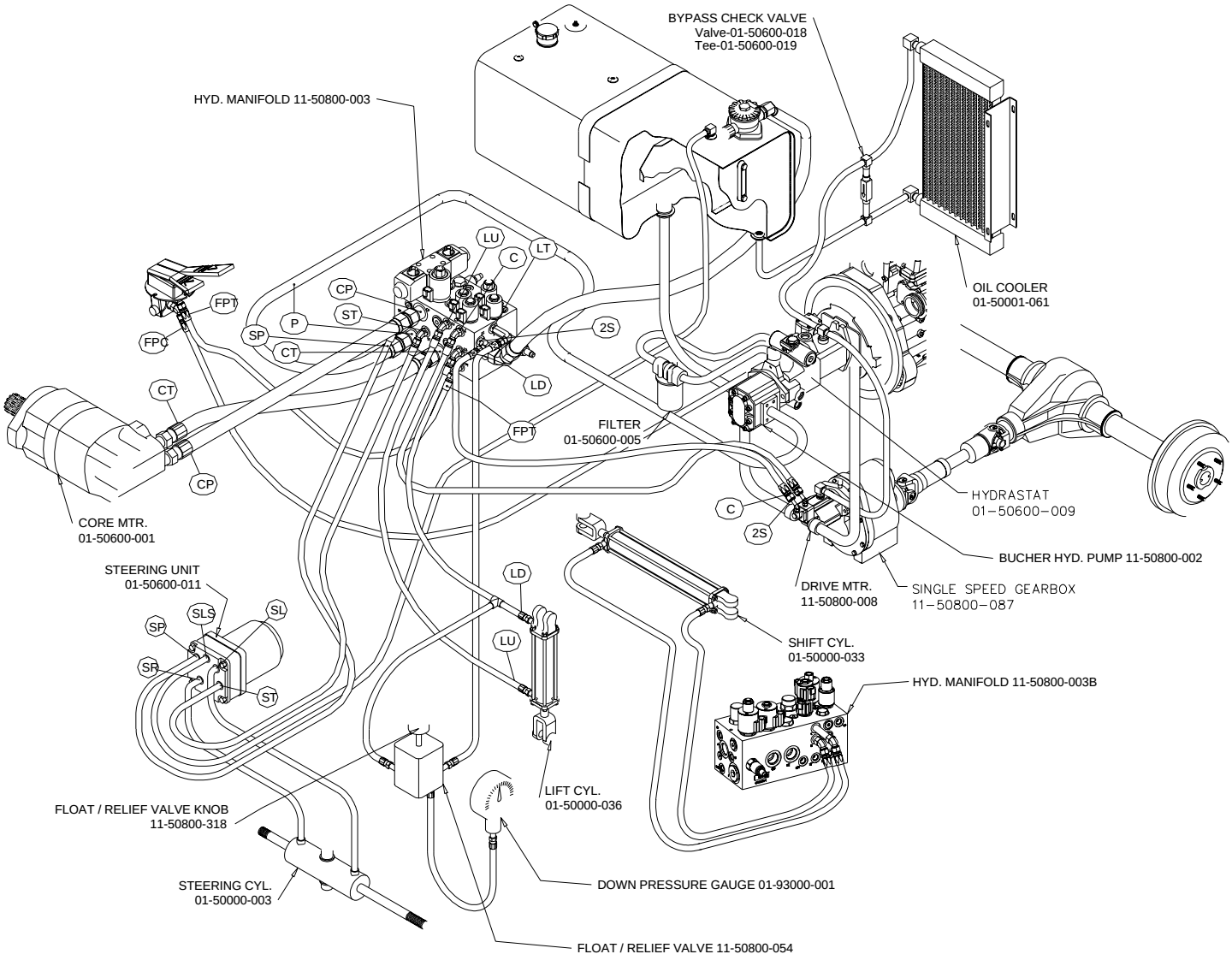

Preventative Maintenance Procedures For The Air Conditioning System

Preventative maintenance is a result of the need to efficiently curb the cost of keeping your vehicle's air conditioning system functioning properly. Logic would dictate that you not wait until it breaks to fix it. Very few of us have any hesitation in recognizing the need to regularly change the engine oil and oil filter to prolong the life of our engines. Lubrication, wheel alignment, tire replacement, brake adjustment, and fluid level checks are just a few of the areas that are checked, repaired, and/or maintained on a regular basis. The ever increasing recognition of a need for proper vehicle maintenance in order to run a cost efficient business, coupled with the rising dependency on air conditioned vehicles, and the high cost of downtime, have combined to create a growing demand for a sensible maintenance program for A/C systems.

The logical approach is to adopt a regular service procedure based on the concept of prolonging the life of the expensive components used in the A/C system. These are generally recognized as the compressor, evaporator coil, and condenser coils. The expansion valve is not ultra-expensive, but changing the receiver-drier and properly evacuating the system can usually extend its service life. The receiver-drier is the service component that is designed to protect the expansion valve in virtually all A/C systems. It is expendable and its function is comparable to the engine oil filter.

This manual is designed to make you comfortable with basic air conditioning concepts. With this newfound or renewed understanding of vehicle A/C systems, it should be easier for you to recognize the validity of the proposed preventative maintenance program.

We shall approach the preventative maintenance program by first discussing the basic scientific principles that enable A/C systems to function. We shall then proceed through a discussion of system components and refrigerant flow patterns. This will allow you to better understand and hopefully approach the service and troubleshooting procedures that follow with a firm. Logical grasp of the functions of the components and how they interact with each other. We shall also look at the safety considerations that you should be aware of in working with the A/C systems. It is also very important that we discuss the service tools that will enhance your servicing of the A/C system.

It should be noted that the procedures contained herein are not just applied A/C theory, but are tried and tested methods. Even if you have years of A/C repair experience, hopefully you will benefit by the information and procedures outlined in this manual.

Recommended Preventative Maintenance Procedure

The following procedures are set forth in a manner that will allow both the beginner and the expert to utilize the contents successfully. After you have followed these steps a few times, they should become second nature.

When you approach a vehicle for preventative maintenance or for service due to a complaint, you will find it beneficial to install your manifold set (gauges) immediately. There is no other reliable means of determining exactly how well or poorly a system is functioning. It is also recommended that you hook-up both the high side and low side test hoses each time. Just hooking up one side will not positively indicate the performance of the other.

Manifold Hook-Up
Systems with Screw Type Service Valves

1. Remove the protective caps from the service ports.
2. Connect the test hose ends onto the service ports:
   Blue hose on the low side or suction side
   Red hose on the high side or discharge side
3. Hook the center hose to the recovery machine.

Visual Inspection

Visually inspect the vehicle's A/C components for signs of failure, excessive wear, or any condition that might lead to a component failure, such as:

1. Belt – check for proper tension, signs of fraying, cracking, or slippage as well as alignment.
2. Clutch – look for signs of excess heating or scaling which could be due to improper voltage, slippage of the belt, weakening clutch plate fingers, defective bearing.

3. Hoses – check for wear spots, rubs, brittleness, weather-cracking, excessive heat exposure, and signs of leaking which might be indicated by oily spots on hoses or fittings.
4. Condenser – check for indications of airflow restrictions, i.e., bent fins, bugs dirt, and debris.
5. Drier sight-glass (a & b vehicle running, c & d vehicle not running).
a. Bubbles – indicating possible low refrigerant condition.
b. Clear – indicates either no refrigerant or at least a full charge (overcharge is still possible).
c. Cloudy – brown residual coating indicative of desiccant deterioration or severe moisture contamination (system must be flushed – see flush procedure).
d. Oily streaks – indicating oil contamination usually compressor burnout (system must be flushed – see flush procedure).
6. Evaporator Coil – check for indications of airflow restrictions such as bent fins, dirt, foreign debris, and dirty filter.
7. Drain Hose – check to ensure unrestricted water flow.

Electrical System Checks

It is recommended that you run an electrical system check to ensure that the system can operate in all available modes. The electrical system includes the blowers, safety switches, thermostat, and electro-magnetic clutch.
To check the electrical system:

1. Turn on the A/C fan switch. Fans should blow on all available speeds; if not blowing check circuit breaker, blower switch, blower motor, and wiring.
2. Turn the thermostat to colder position. The electro-magnetic clutch should engage (you can usually hear it engage if engine is not running). If it fails to engage, check voltage at the thermostat, then trace through safety switches to clutch assembly to find open circuit. Upon finding any faulty component, repair or replace as necessary.

If electrical components seem in order, you are ready to crank the vehicle and run system to determine the condition of the A/C system.

A/C System Performance Checks

To evaluate the performance and/or condition of any A/C system properly, it is necessary to run the vehicle's engine so that the compressor can pump the refrigerant through the various components enabling you to determine if a problem exists. This evaluation should be carried out on any vehicle that you are working on. Failure to do this could result in the customer having to bring the vehicle back due to a problem you could have solved earlier or, at the very least, your having to repeat certain steps such as evacuating.

Evaluating the A/C Components

1. Crank the vehicle – run 1200 to 1500 RPM.
2. Turn the A/C system on (fan, thermostat).
3. Check gauge reading and unit performance (duct temperature, clutch cycling, etc.) to see if the unit is performing as it should be. If it is not, you will have to trouble-shoot the unit (refer to Troubleshooting The A/C System).

Normal gauge readings are as follows:
Low side (suction) 10-25 PSI High side (discharge) 250-270 PSI

These readings are dependent on many external factors including ambient temperature, humidity and temperature inside cab. If the readings are in the normal operating range, you may proceed to the **Drier Change Procedure**. If the readings are not proper, you should trouble-shoot the system and correct the problem.

Drier Change Procedure

1. With vehicle's engine turned off, open both manifold hand valves and recover refrigerant using manufacturers recommended procedures.
2. With refrigerant discharged, make any necessary repairs to the system, then remove old drier, and install new drier by hooking the line from condenser to the inlet side and the line to the expansion valve to the outlet side. **Do not assume** that the old drier was hooked-up correctly. Failure to do so will result in a system malfunction. (Note: The inlet side of the drier should be marked "IN" or should have a flow indication label that shows which side is the inlet.)
3. Use only heavy-duty high capacity receiver-driers. (The desiccant content of many driers is insufficient for use on an annual preventative maintenance basis. Many suppliers are using driers with an automotive type bag desiccant. Care should be exercised when choosing your supplier because your maintenance is no better than the drier you use.)
4. Proceed to Refrigerant Oil Maintenance Procedures.

Refrigerant Oil Maintenance Procedures
As with any moving part, lubrication is the key to long life. The single most neglected aspect of A/C system maintenance is that of maintaining the proper amount of oil in the unit (11 oz. in new system).

1. The refrigerant oil in the compressor travels with the refrigerant throughout the system to lubricate all of its components.
2. The receiver-drier absorbs some of the refrigerant oil (approximately 2 oz).
3. A/C systems leak refrigerant and refrigerant oil; therefore, adding refrigerant and not adding oil is asking for major component failures.
4. Measuring oil level in the compressor will not always give you a true measurement of the oil in the system (i.e. oil could have been pumped out of the compressor up to the point of restriction which might be the drier expansion valve).
5. Flushing the system with propellant (such as nitrogen) and draining the oil from the compressor is the only sure way to cure an over or under charge of oil.
6. When you discharge the refrigerant from a system, oil is also discharged.
7. Consistency is the key to maintaining the proper oil level.

To avoid having to flush the system every time it is serviced, we have adopted guidelines that will ensure proper oil level in the system if applied regularly. They are:

1. If you discharge (or leak out) the refrigerant and change the drier, add 4 oz. of refrigerant oil. To further break this down, the drier is accountable for 2 oz. and the refrigerant charge is accountable for 2 oz. This also takes into consideration the oil lost due to system leakage or seepage.
2. If the oil is contaminated (compressor burnout or drier desiccant breakdown), the system must be flushed and a complete charge of oil added. (See Flush Procedure.)
3. Oil should be kept clean and dispensed from a clean measuring device.
4. If you have access to pressurized oil charge (either in the 4 oz. cans or through a service center with bulk A/C refrigerant oil), you will not have to measure and pour. Otherwise, measure and pour the oil into either the drier or compressor prior to evacuating the system.

You should now have a basic understanding of the importance of refrigerant oil to the A/C system and how to maintain it properly. You can now proceed to Evacuating and Charging Procedures.

Evacuating and Charging Procedures
The purpose of evacuating a system is to remove the air and moisture from the system. It is foolish to change any of the refrigeration components in an A/C system without evacuating the system.
An evacuation of 2 to 5 minutes is not sufficient to ensure a clean system. Moisture is the #1 enemy of an A/C system and we must boil it out of the system. This can only be accomplished by lowering the pressure in the system, which lowers the boiling point of water so it is vaporized through the boiling process. This is the process we commonly refer to as “pulling the vacuum” or evacuation.
Since this is such an important process, we must approach it and apply it with the utmost care. To ensure that we are doing a proper job, let us first evaluate the vacuum pump and its capacity. Then we will go through the evacuation and charging process step-by-step with explanations along the way.

Evaluating Your Vacuum Pump
Most vacuum pumps will have tags that state their capacities. This tag should tell you the CFM (cubic feet per minute) that the pump is capable of. It may also give its micron rating which is basically a measurement of the pump’s deep vacuum ability. Knowing the capability of your pump is extremely important, because this will be used to determine the length of time you have to run the pump during the evacuation process unless you use a micrometer. (Micrometers are somewhat expensive and ultra-sensitive as well as something that not every shop has available. If you do have one you should follow the instructions for the specific unit you have.) As most shops will not have micrometers available, we shall set a time schedule for evacuation based on the average time needed to sufficiently evacuate a system by a vacuum pump rating.

Evacuating Schedule

1.2 to 2 CFM Pump	45 minutes
3 CFM Pump	30 minutes
5 CFM Pump	15 minutes

This time schedule assumes that the pump is “vacuuming” at its rated capacity. Periodically, it will be in your best interest to test the vacuum pump (see step 2) to confirm its capability of boiling water.

Vacuum Pump Test

1. Fill a glass jar or container with approximately 2 inches of water.
2. Run the service hose from the vacuum pump port and insert in the top of the container (do not stick end in the water).
3. Seal the top of the container with sticky tape or duct tape.
4. Switch on the vacuum pump.
5. If the vacuum pump is pulling 26 inches of vacuum or better, the water will boil and/or bubble immediately.
6. If the water does not boil, then the vacuum pump is not capable of pulling sufficient vacuum to properly clean out the system and the pump must be replaced or repaired. Note: Be sure the top of container is sealed sufficiently.
7. Test your vacuum pump periodically to ensure that it is doing a proper job.

Vacuum Pump Maintenance

1. Change the oil in your vacuum pump after every 25 to 30 system evacuations.
2. Use only Vacuum Pump Oil. Refrigerant oil is of a different viscosity and will not ensure a long vacuum pump life.
3. Keep caps on the ports of your vacuum pump when not in use.

Now that you have a better understanding of the evacuation process and how to be sure the vacuum pump is properly performing, you are ready to evacuate the system. (Note: You need not perform the above tests each time but performing them periodically is strongly recommended.)

Evacuating the System

With manifold set hooked-up (as described in MANIFOLD HOOK-UP section) and refrigerant drained out of the system (as detailed in DRIER CHANGE PROCEDURE), you are now ready to proceed with the evacuation process. Note: If you are not using pressurized oil charge, you need to add the proper amount of oil prior to evacuating the system.

1. With both handles on the manifold set wide open, hook the center hose to the suction port of the vacuum pump.

2. Switch on the vacuum pump.
3. Evacuate the system for the proper amount of time as determined by the size of the vacuum pump you are using as discussed previously.
4. If you desire to run a vacuum test on the system for leaks proceed as follows:
    a. Run vacuum pump for approximately 5 minutes.
    b. Close manifold set handles.
    c. Switch off vacuum pump.
    d. Note gauge readings (which should be into vacuum).
    e. Allow to sit for 2 minutes.
    f. Any rise in pressure could indicate a leak (refer to Leak Testing The System).
    g. No rise in pressure would indicate a relatively tight system (though not a 100% absolute test as vacuum can sometimes close minute leaks which will reopen once system is pressurized). You can reopen manifold set (wide open) and continue to pull vacuum for the allotted time as determined by the size of the vacuum pump.
5. After pulling for the proper amount of time:
    a. Shut off the manifold set.
    b. Shut off the vacuum pump.
    c. Proceed to Charging the System.

Charging the System

The procedure for charging an A/C system is merely finalizing the evacuation process. That is to say, that you can't properly charge a system unless you remove the air from the system. Adding refrigerant to a system's existing refrigerant is merely patchwork.

The charging procedures are:

1. Hook the center hose of manifold set to oil charge if using pressurized oil charge. If not, you would have already added oil prior to evacuation and you should proceed to step 5.
2. Purge air from the center hose.
3. With vehicle engine turned off, open the high side manifold handle.
4. Shoot the proper amount of oil in to the system.

5. Hook the center hose to the refrigerant supply.
6. Purge air from the center hose as in step 2.
7. Charge approximately 1 lb. of refrigerant into the system on the high side of the system.

Remember: The vehicle is not running. What should happen is the following:

a. The high side gauge should rise to supply pressure, which is usually 60 to 90 PSI.
b. The low side gauge should rise to equal the high side reading. This is without the vehicle running, so equalization indicates that the expansion valve has opened. But if, for example, the high side reads 70 PSI and the low side reads 30 PSI, changes are that the expansion valve is not going to function properly or that another restriction exists in the system. You should find and correct this problem right now. This step is a good static test on the expansion valve and should be regarded as such.
c. If both sides indicate equalization close high side gauge, start the engine (1200-1500 RPM), turn the A/C system on high speed, thermostat at coldest setting.
d. Make sure the condenser is operating properly.
e. Open the low side of the manifold set and charge with 2 lbs. of 134a refrigerant.
f. Shut off the low side of manifold set.
    a. Run the system to ensure that the system is operating properly. (Refer to A/C System Performance Check.)
    b. If satisfied that the system is functioning properly, shut off the vehicle, and remove the test hoses carefully, realizing that the pressure indicated on gauges is the pressure present in the hoses.
    c. Cap the service ports.

Summary

We have now completed the evacuation and charging procedures that are necessary (not optional) to complete a successful maintenance or service job. This may seem like a lot of steps to go through, but the explanation is a lot longer than the actual work process. If we condensed the entire P.M. Procedure it would look like this:

1. Evaluate A/C system – electrical and refrigeration.
2. Change the receiver-drier and any other defective parts.
3. Evacuate the system.
4. Charge system with oil and refrigerant.

Flushing The System

Flushing the system is a procedure that must be performed if any of the following conditions exist:

1. compressor burn-out or failure
2. drier desiccant breakdown
3. extreme moisture contamination
4. high side restriction
5. you are unsure of oil contents of system
6. system has been open for lengthy period

These conditions dictate flushing the system to ensure a proper service.

Nitrogen has become the primary flushing agent due to:

1. the environmental taboo on releasing CFC-based refrigerants to the atmosphere
2. the dry characteristic of nitrogen
3. the high pressure available with nitrogen
4. ease with which nitrogen may be obtained

Flushing Procedure

Flushing with nitrogen is easily accomplished if you remember the following:

1. Never flush through any of the following major components: drier, expansion valves, or compressor.
2. Regulate the pressure to 150-250 PSI.
3. Adapt the air nozzle to the end of the test hose coming off of the regulator. (Note: check burst pressure on the hose and be sure it can withstand regulated pressure.)
4. Always cover the end of the hose or unit being flushed to avoid spraying oil and contaminants everywhere.

Bearing in mind the above recommendations, you can now flush the system following the normal refrigerant flow pattern in the following steps:

1. Flush from the discharge hose fitting (at compressor) through the condenser to the fitting at inlet of drier.
2. Flush from the fitting at the outlet of the drier to the inlet of the expansion valve.
3. Flush from the suction hose fitting at the compressor to the outlet fitting of the expansion valve.
4. Flush the evaporator coil separately.

Note: Always cover the outlet fitting of the component or hose being flushed with rags or shop towels to minimize mess and hazard to yourself and others.

Properly flushing the system will remove virtually all of the oil in the system except that in the compressor. If you are reusing the old compressor, you should drain the oil from it and replace it. If you are installing a new compressor, it will have the proper amount of oil in it from the manufacturer. Remember that you must add oil to the system to compensate for the hose and coil lengths (see Evacuating and Charging Procedures).

Note: if a condition warrants flushing the system, a drier change should be considered mandatory.

Leak Testing The System

The safest and most practical method of leak detection is the electronic leak detector. It will detect leaks as slight as ¼ pound per year (according to the manufacturers). The system can be pressurized with refrigerant (although expensive and also condemned by environmentalists) or nitrogen (recommended). Nitrogen will give a higher internal pressure and will carry latent freon (that freon present in the system) to the point of leakage. This higher pressure makes it possible to detect smaller leaks that would be hard using only refrigerant bottle pressure. The manifold set should always be used when leak testing a system, as this will give you instant reference to the amount of pressure you have in the system (recommended pressure not to exceed 250 PSI).

The procedure is as follows:

1. Hook the manifold set to the system.
2. Hook the center hose (supply hose) to the refrigerant or nitrogen source.
3. With the vehicle engine turned off, open the suction side of the manifold set. This will allow nitrogen or refrigerant to fill the system to the supply or regulated pressure.
4. Close the manifold set handle.
5. Use an electronic leak detector on the system to find the leakage area and the pinpoint leak.
6. Upon finding the leak, make necessary repairs.

There are other methods of leak detection such as halide torch, soap bubbles, dye colored refrigerant, or vacuum test.

When you lose refrigerant due to leakage, you also lose refrigerant oil. This causes:

1. Possible strain on the compressor.
2. Air and moisture replacement of the lost refrigerant.
3. Premature saturation of the drier desiccant material.
4. The tasks of the refrigerant not to be carried on, such as condensation, evaporation, or oil transporting for lubrication purposes.

Therefore, leaks must be found and corrected and the system must be properly serviced to minimize the effects that air and moisture have on A/C systems.

Troubleshooting The A/C System

Troubleshooting Procedures Defined

Troubleshooting makes use of logic and your knowledge of component function to pinpoint the cause for any irregular operating condition. When you are evaluating an A/C system, this generally requires going through the steps as outlined under “Manifold Hook-up”, “Visual Inspection”, and “Electrical System Checks” in the Recommended P.M. Section Procedures.

Initial Steps

When you are called on to troubleshoot a system, it is important that you gather any information that you can from the operator. This information may be useful in helping you find the source of the problem, as well as keeping you from overlooking a problem that takes time to develop (such as freezing-up). If the operator can only say “the A/C doesn’t work,” this gives young insight as to the direction to start looking for the problem. If possible, locating and curing the problem. He will benefit by having an A/C system that performs properly and you will avoid a “comeback”.

Patchwork Can Mean Comebacks

After you have gathered all of the information that you can, use it to help evaluate the system. While this information is sometimes helpful, do not let it cause you to skip steps in the evaluation procedures previously outlined. The operator is usually not an A/C mechanic, so you need to use your knowledge to pinpoint and correct the problem (or problems). EXAMPLE: an operator writes up a vehicle A/C as freezing-up. You know that last week you had to change the thermostat on a vehicle just like this one to cure a freeze-up problem. You change the thermostat and consider the problem solved. When you fail to hook-up the gauges and run the proper evaluation checks, you run the risk of overlooking the real problem. In the case of freezing-up, it could be caused by a number of things, such as low refrigerant charge, restricted drier, or a restricted expansion valve, as well as a malfunctioning thermostat. Following the evaluation procedures would have positively identified this problem.

You should also be aware of the fact that a system may have more than one problem. There could be electrical problems and refrigerant system problems present at the same time. Do not overlook these possibilities because it will cause a comeback.

Troubleshooting Chart

The following chart lists some of the common problems that plague A/C systems and refer them to the pressure readings on your test gauges. They are referred to as “low” or “high” due to the fact that different systems and conditions have different normal readings.

Suction	Discharge	Possible Problem
Low	**High**	1. Restriction between the discharge of the compressor and inlet of receiver drier. Check condenser and condenser lines for a point of restriction that may create flashing. Condition indicated by an extreme differential in temperature at the point of restriction.
Low	**Low**	1. Possible restriction between drier and suction side of compressor. 2. Low refrigerant charge – bubbles in sight glass. 3. Restriction at drier or expansion valve – sight glass usually clear.
High	**High**	1. Air in system. 2. Overcharged system (oil or refrigerant). 3. Condenser fan not working. 4. Air flow restriction on condenser.
High	**Low**	1. Weak compressor – indicated by accelerating the engine and watching the suction and discharge readings. Normally, suction moves lower and discharge side should rise. 2. Expansion valve flooding or stuck open – this would cause high and low sides to become less distinguishable.